Industrial heat pump demonstration case – shrimp process plant



Figure 1: Ammonia heat pump installed in Stella Polaris.

Summary of demonstration case

In this demonstration case, the heat pump replaces a propane-fired steam boiler operating in the food processing facility of Stella Polaris in Norway. The plant specializes in cooking and peeling cold-water shrimp, for later freezing and packing.

The heat pump manufactured by Mayekawa, consists of an industrial heat pump of approximately 800 kW thermal capacity, which can cover the full demand of the process under normal operating conditions. The heat pump uses the heat rejected from the shrimp freezing plant at ~18°C and produces steam at 150°C (4 bar abs).

Due to the large temperature lift of over 130 K, a cascade cycle was chosen. This setup includes two connected cycles: an ammonia cycle at the bottom and a pentane cycle at the top. These are linked through a heat exchanger, where the ammonia condenses and transfers heat to evaporate the pentane. The source heat from the bottom cycle heat pump is supplied to the top cycle heat pump at approximately 82°C. Both compressors are oil-lubricated screw compressors that have been adapted to operate under the required conditions.

Operating experiences

Process steam for the shrimp cooker is currently supplied by a propane-fired boiler, which consumes approximately 2,700 MWh of fuel annually. With the integration of the heat pump system, the projected primary energy consumption is expected to drop to 1,043 MWh per year, resulting in an estimate CO_2 savings of around 621 tons of CO_2/year.

The heat pump is installed in parallel with an electric boiler, which serves as a backup system. According to performance estimates, the heat pump is expected to achieve a Coefficient

All information were provided by the supplier without third-party validation. The information was provided as an indicative basis and may be different in final installations depending on application specific parameters.

of Performance (COP) of 1.8 for heating, and 2.5 when operating in combined heating and cooling mode.

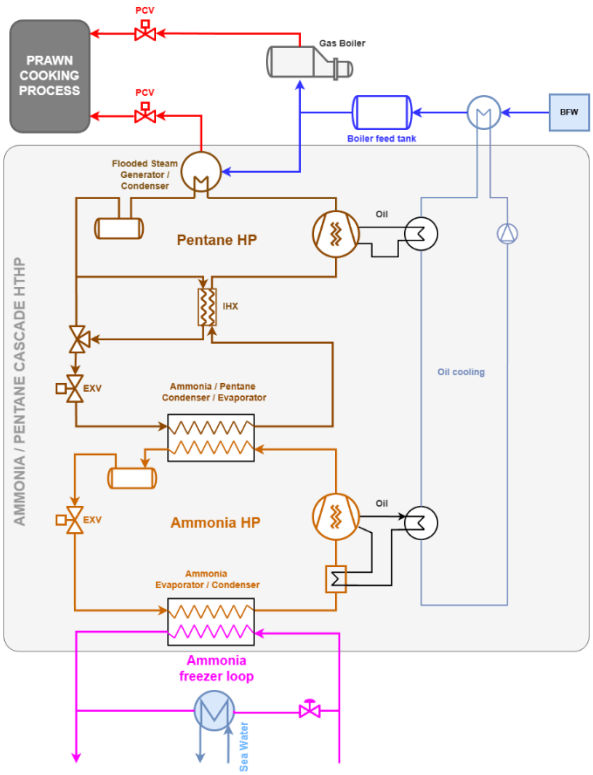

Figure 2: Integration of the cascade heat pump into the process

Special learnings

The integration of this HTHP highlighted valuable lessons across both technical and operational domains. One of the initial challenges was addressing site-specific constraints, particularly limited electrical capacity and civil engineering requirements.

Safety considerations were paramount due to the use of hydrocarbons in the high-temperature (pentane) loop. Key measures included implementing proper ventilation, designing suitable enclosures, integrating anti-freeze protections, and installing hydrocarbon detection systems.

Furthermore, the heat pump's control system required fine-tuning under real operating conditions, as it was directly connected to the process. This setup left little room for error during the initial startup phase. To mitigate risks, dynamic simulations were essential in providing the insights needed to configure and adapt the control strategy effectively.

FACTS ABOUT THE CASE

Installation year: 2025
Operating hours: "N/A"
Working fluid used: Ammonia, Pentane
Compressor technology: Screw/Screw
System manufacturer: Mayekawa
Sector: Food
Performance in design point:

- **Heat source:** 12 °C → 7 °C, Ammonia
- **Heat sink:** 140 °C → 145 °C, steam
- **Heat supply capacity:** 0.8 MW
- **$COP_{Heating}$:** 1.8 (design)
- **$COP_{Combined}$:** 2.5 (design)

Investment cost: 0.8 M€ (excluding integration
Savings: Enter cost savings in the unit €/a
Estimated annual CO_2 savings: 621t/a
Link to webpage or report:
Prawn processing in Norway – Spirit-Heat
High-temperature heat pump by Mayekawa – Spirit-Heat

Contact information

MAYEKAWA
koen.verplancke@mayekawa-europe.com
+ 32 (0)2.758.02.28
Stella Polaris
jaran@stellapolaris.no
+47 90981162
TNO
gustavo.oterorodriguez@tno.nl
+31 615124557

All information were provided by the supplier without third-party validation. The information was provided as an indicative basis and may be different in final installations depending on application specific parameters.