Consiglio Nazionale delle Ricerche

ITC Consiglio Nazionale delle Ricerche Istituto per le Tecnologie della Costruzione

ITAE Consiglio Nazionale delle Ricerche

INTEGRATED HEATING AND COOLING SOLUTIONS: RESEARCH PERSPECTIVES FROM CNR

Laura Fedele
Consiglio Nazionale delle Ricerche
Istituto per le Tecnologie della Costruzione, Padova

National Workshop on Heat Pumping Technologies
November, 17th 2026 Pisa, Italy
Area della Ricerca del CNR

ENEA National Italian Workshop on Heat Pumping Technologies Pisa - November 17th 2026

IEA HPT

Outline

CNR research activities on heat pump technologies

- Thermally driven heating and cooling technologies
- High-temperature heat pumps for industrial processes
- Heat pumps for smart and zero-energy buildings
- Advanced control, refrigerants and heat transfer fluids
- Integration of heat pumps and thermal energy storage

Consiglio Nazionale delle Ricerche

ITC Consiglio Nazionale delle Ricerche Istituto per le Tecnologie della Costruzione

ITAE Consiglio Nazionale delle Ricerche

Research and development activities at CNR ITAE

CNR ITAE main fields of research cover the following aspects

- Innovative thermally-driven heating and cooling solutions for building and industrial applications
- System integration of high temperature heat pumps for industrial applications

The activities are carried out mainly in the framework of EU-funded projects and in direct collaboration with industrial partners.

RESEARCH TOPICS AND FUNDED PROJECTS

	Materials	Components	Detailed modelling	System modelling	Prototyping / testing
Renewable H&C in buildings / industries			SoBjo Rev; ATCL	SunHorizon; GEOFIT	hycool; ZEOSOL; RE-WITCH
DHN-integrated sorption technologies		HYPERGRYD		MISSION INNOVATION	
Energy management in Data centres				HYCOOL-IT	

Consiglio Nazionale delle Ricerche

Sorption heat upgrading for district heating networks: the HYPERGRYD project

Phase 1

Evaluation of different materials

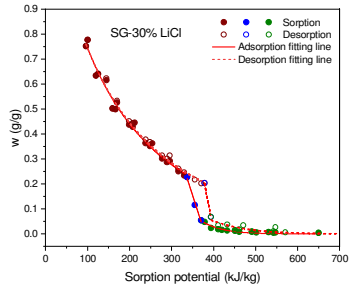

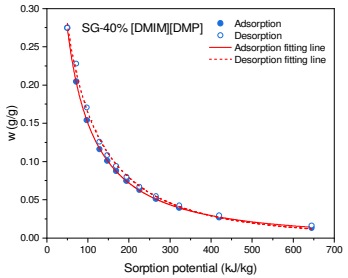

Phase 2

Selection of the main components

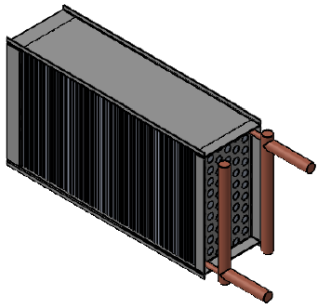

Phase 3

Small-scale testing



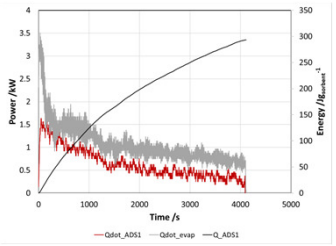

Phase 4

Dynamic modelling - Dymola

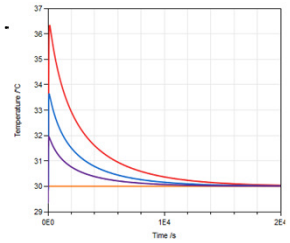

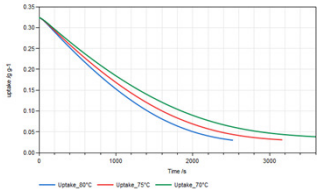

Phase 5

Upscaling for real-case use

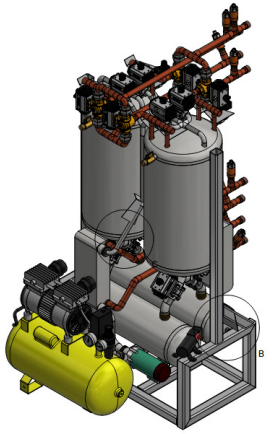

Phase 6

Tests in living lab

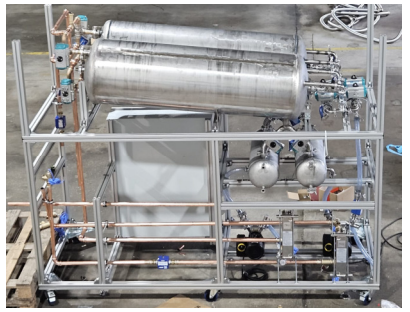

HYPERGRYD

This project has received funding from the H2020 programme under Grant Agreement No. 101036656

ITAE Consiglio Nazionale delle Ricerche

Prototype setup and experimental characterization

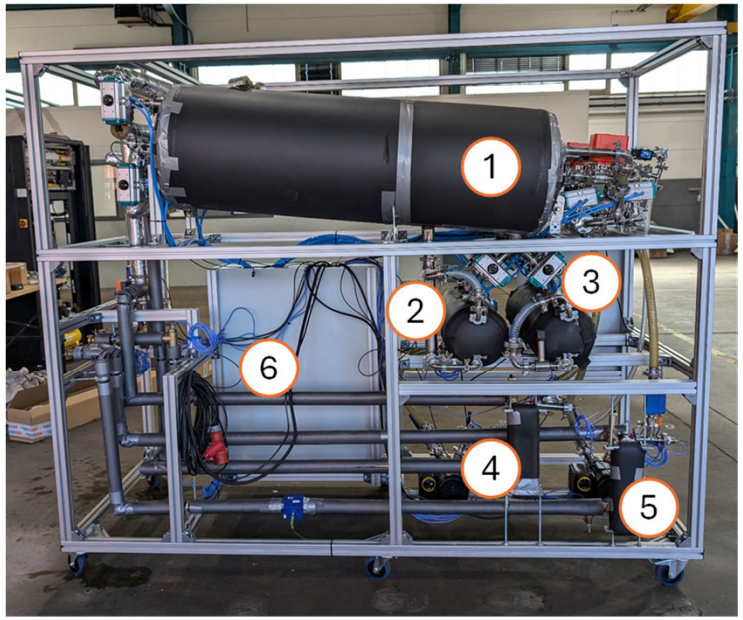

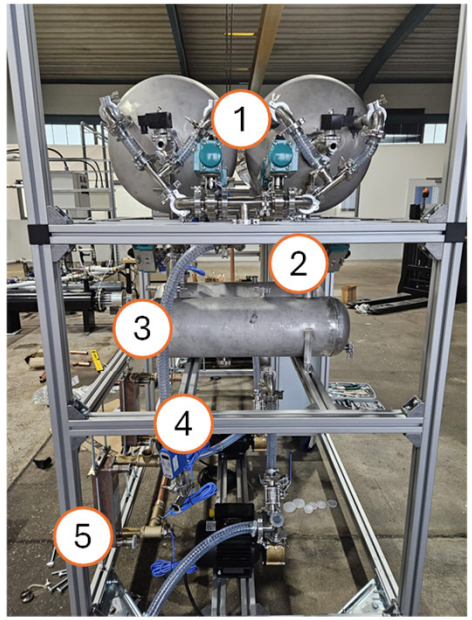

1: adsorber modules
2: evaporator tank
3: condenser tank
4: evaporator HEX
5. Condenser HEX
6: electrical cabinet

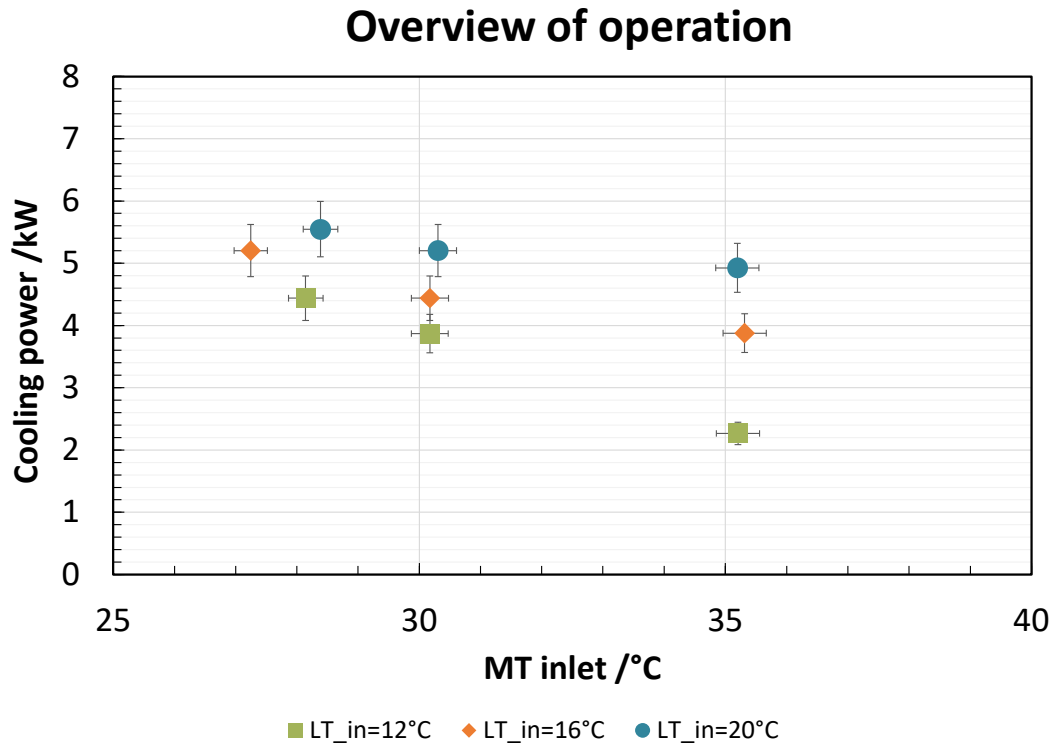

Advancement compared to state-of-art → **2x Increased heat transfer efficiency for evaporation/condensation**

V. Palomba et al. Experimental proof of a thermal system for cooling and storage applications employing $CaCl_2$/silica gel composite adsorbent. Energy Conversion and Management, 2025. 10.1016/j.enconman.2025.120072

HYPERGRYD

This project has received funding from the H2020 programme under Grant Agreement No. 101036656

ITAE Consiglio Nazionale delle Ricerche

RE-WITCH: next-generation adsorption cooling chiller driven by low-grade waste heat

Historical evolution of the adsorption cooling technologies.

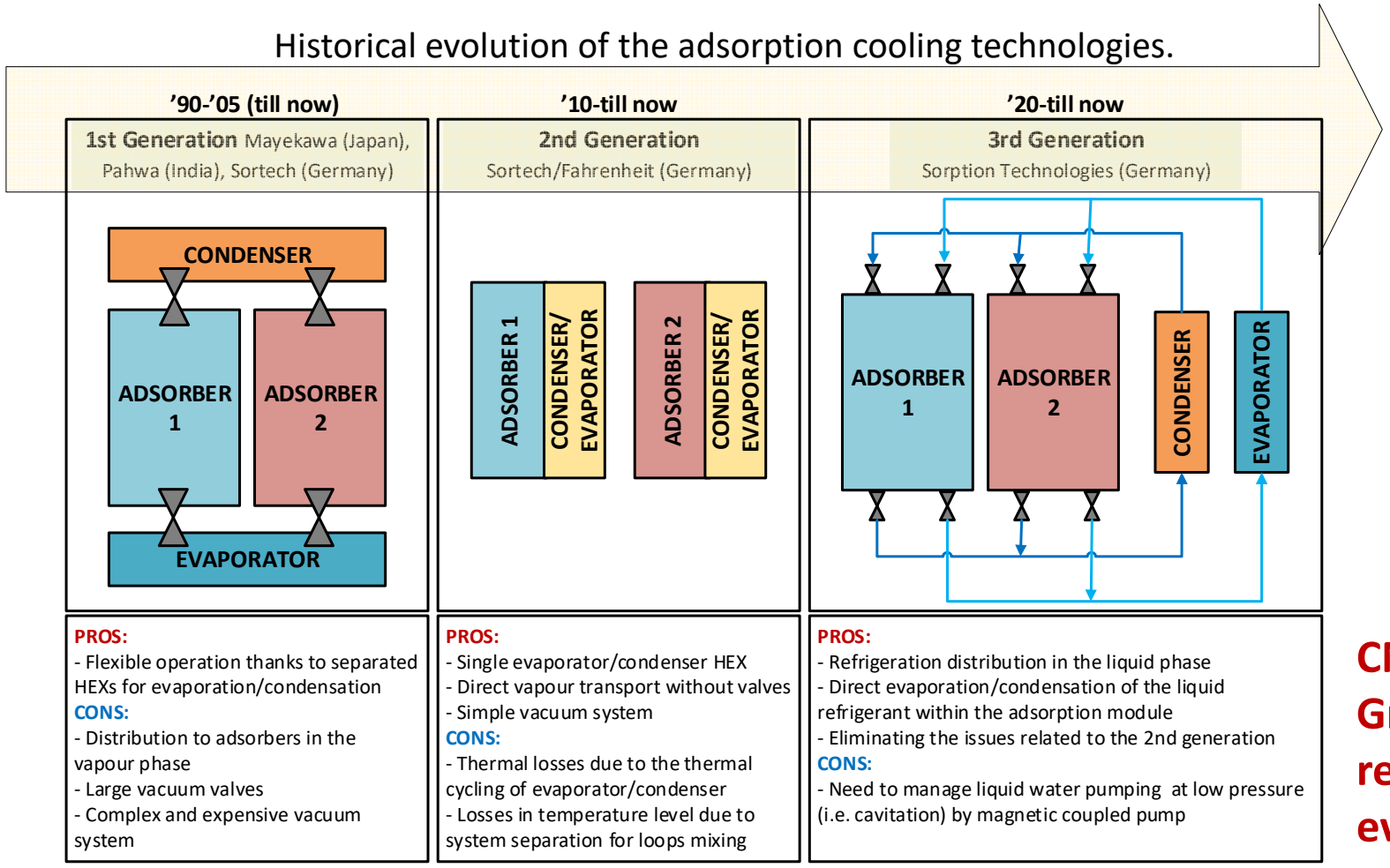

PROS:
- Flexible operation thanks to separated HEXs for evaporation/condensation

CONS:
- Distribution to adsorbers in the vapour phase
- Large vacuum valves
- Complex and expensive vacuum system

PROS:
- Single evaporator/condenser HEX
- Direct vapour transport without valves
- Simple vacuum system

CONS:
- Thermal losses due to the thermal cycling of evaporator/condenser
- Losses in temperature level due to system separation for loops mixing

PROS:
- Refrigeration distribution in the liquid phase
- Direct evaporation/condensation of the liquid refrigerant within the adsorption module
- Eliminating the issues related to the 2nd generation

CONS:
- Need to manage liquid water pumping at low pressure (i.e. cavitation) by magnetic coupled pump

Sorption Technologies

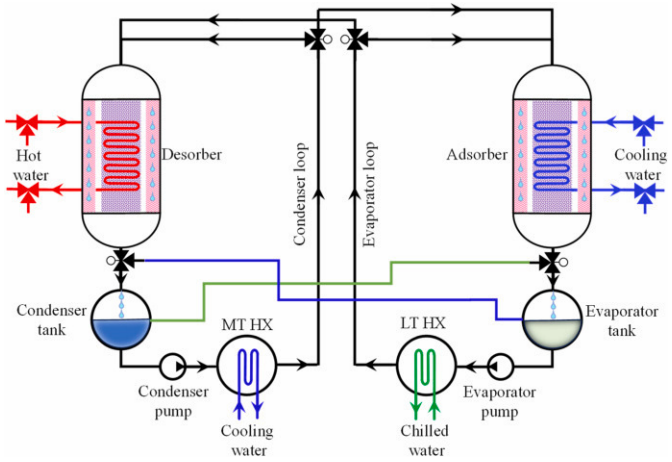

CNR ITAE and Sorption Technologies GmbH are co-developing a liquid-phase refrigerant distribution with direct evaporation/condensation inside the adsorption module

RE-WITCH
The coolest cold from the cleanest heat

This project has received funding from the Horizon EU programme under Grant Agreement No. 101138697

ITAE Consiglio Nazionale delle Ricerche

Experimental validation of a 20 kW adsorption cooling prototype





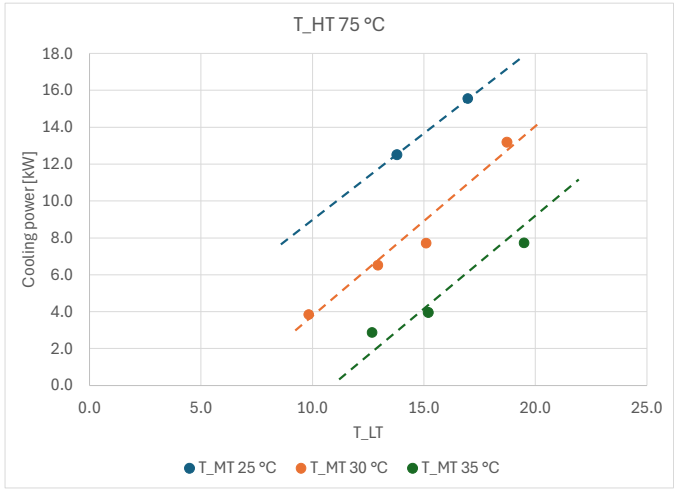

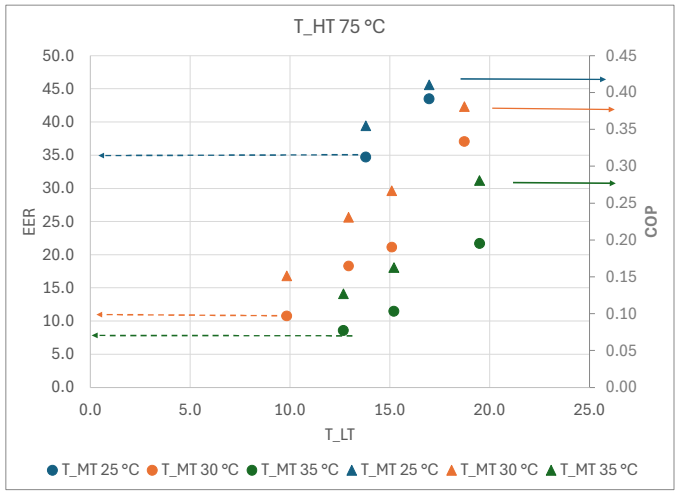

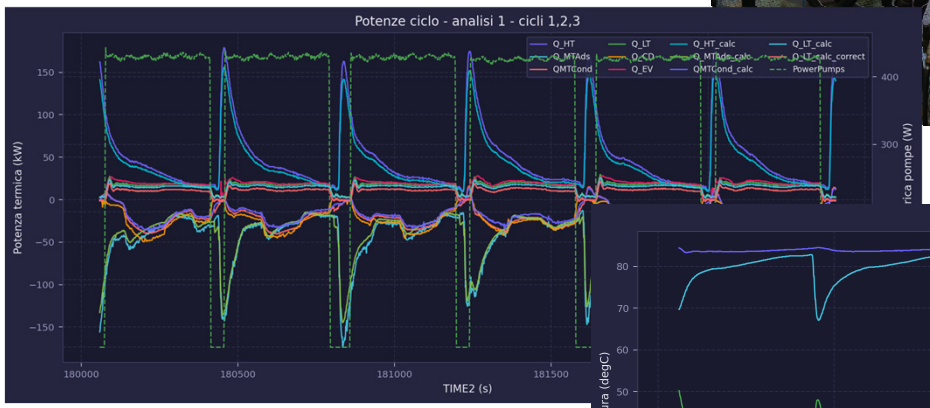

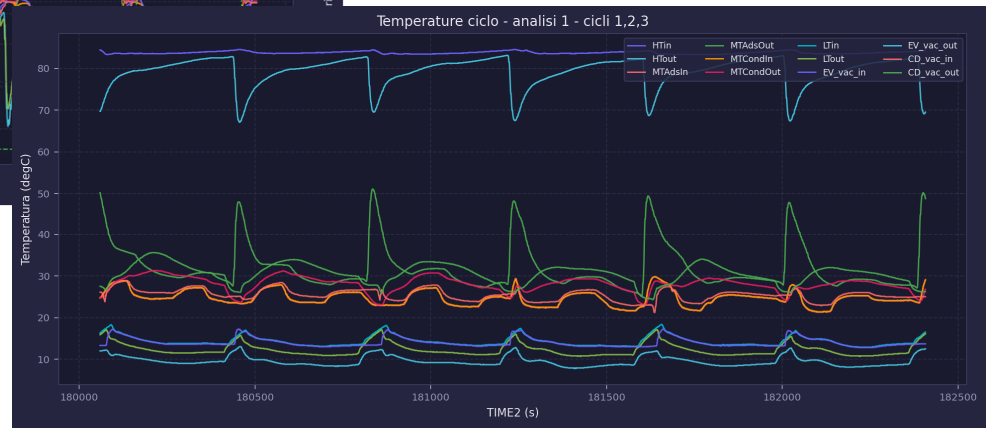

Preliminary results showing:

- **cooling power slightly below the target (20kW).**
- **Full capability to operate at driving temperature down to 75°C**

- **Thermal COP ranging from 0.1 to 0.4**
- **EER between 10 and 35**

M. Gado et al. A new concept of adsorption heat pumps: Proof-of-concept and feasibility assessment. Renewable Energy, 2026. 10.1016/j.renene.2026.125654

RE-WITCH
The coolest cold from the cleanest heat

This project has received funding from the Horizon EU programme under Grant Agreement No. 101138697

Consiglio Nazionale delle Ricerche

Numerical simulation of high-temperature heat pumps integrated with renewable sources in industrial processes: an industrial case study

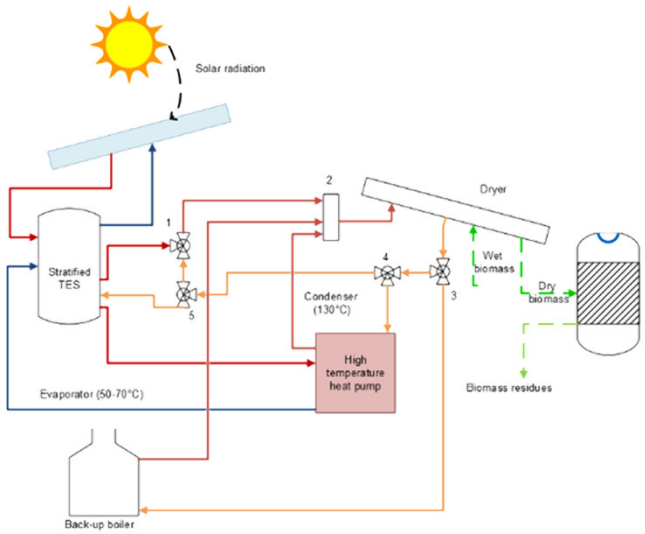

Integrated process for the drying stage of wet biomasses

Main components:

- high-vacuum flat-plate solar collectors (TVP Solar)
- PV solar field (OMNIA Solar)
- High temperature heat pump R1233zd operating fluid

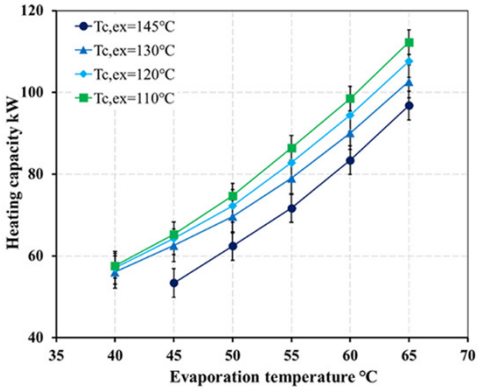

HTHP performance curve

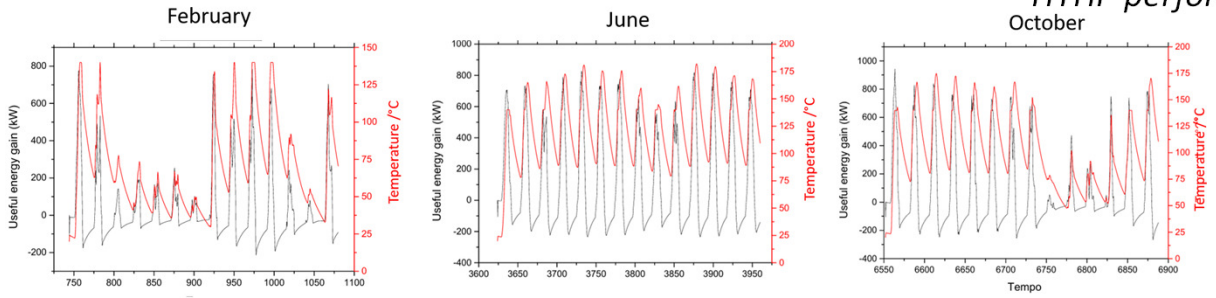

Main results:

- The system can operate throughout the year. Solar thermal energy is prioritised in summer for direct drying, while it supports the HTHP evaporator during winter and intermediate seasons.
- Up to 85% decarbonisation can be achieved with 3,500 m² of solar thermal collectors and PV panels.
- From a decarbonisation perspective, the contribution of PV to supporting the HTHP is higher than that of solar thermal energy.

Development activities at CNR ITC

CNR ITC is a multidisciplinary research institute focused on the built environment and active in several research fields.
As regards HPs, the main activities at CNR ITC include

- Advanced control for industrial heat pumps working with natural refrigerants
- Direct Tests in ZEB
- Geothermal Heat Pumps
- Identification of pure and mixed refrigerants characterized by low GWP (<150) to be applied as working fluid
- Heat transfer improvement through different secondary fluids
- Integration in thermal storage systems

The activities are carried out mainly in the framework of EU-funded projects, past PNRR projects and in direct collaboration with industrial partners.

I-ZEB 2016-2019

RAISE 2022-2026

RISEnergy 2024-2028

iNEST Interconnected Nord-Est Innovation Ecosystem

01/09/2022-28/02/2026

Cheap GSHPs Co-funded by the European Union 2016-2019

GEO4CIVHIC Co-funded by the European Union 2018-2023

ECHO Funded by the European Union 2023-2026

ITC Consiglio Nazionale delle Ricerche Istituto per le Tecnologie della Costruzione

The Research Infrastructure: ZEB-LAB

Full-scale Zero Energy Building laboratory for research on

- Materials, building components, HVAC systems and renewable energy technologies, and their integration in highly efficient buildings;
- Building control and energy management under different operating conditions;
- Occupant comfort and well-being (thermal, visual, acoustic and indoor air quality) through objective and subjective assessment methods.



I-ZEB

RegioneLombardia

AI-based Building Energy Management System for Hydronic Heat Pumps

RAISE project

- Development of an advanced BEMS capable of real-time optimisation of photovoltaics, battery storage and HVAC systems, with extension to Renewable Energy Communities (RECs).
- Installation of a fully monitored hydronic heat pump and a 5 kWh battery storage system in the ZEB-LAB.
- Experimental testing of the BEMS under different operating scenarios and boundary conditions.



Quantity	Instrument	Accuracy
Temperature	4-wire Pt100 RTD	<0.1°C
Mass flow rate	Coriolis flow meter	±0.1%
Volumetric flow rate	Inductive flow meter	±0.8%
Pressure	Pressure trasducer	±0.3%

Monitoring setup of the heat pump and the hydraulic circuit

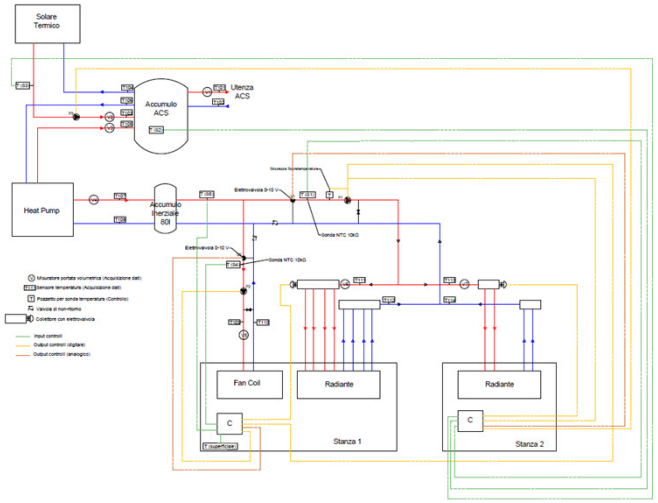

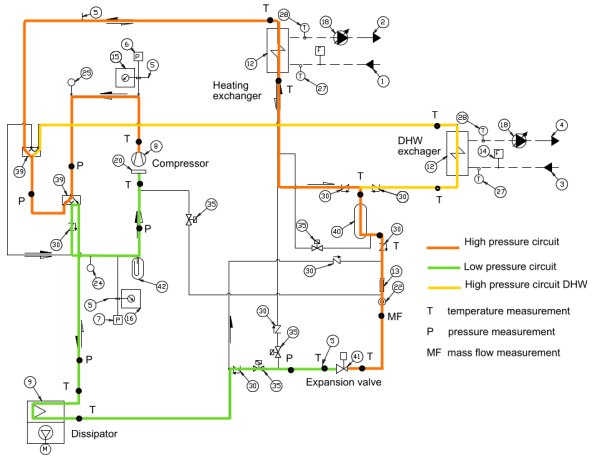

RAISE

Finanziato dall'Unione europea NextGenerationEU

ITC Consiglio Nazionale delle Ricerche Istituto per le Tecnologie della Costruzione

Performance of the BEMS in different scenarios

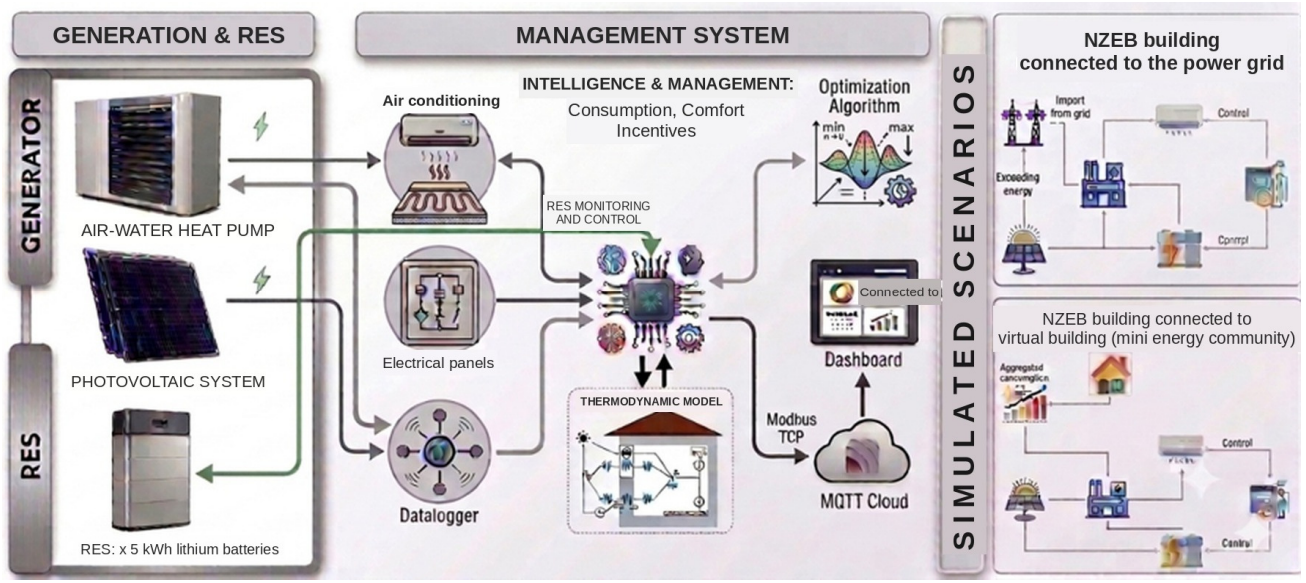

Figure 1 – System architecture and analysed scenarios

Scenarios

- **Scenario 0 (baseline):** no optimisation
- **Scenarios 1–2:** battery optimisation and grid exchange
- **Scenarios 3–4:** thermodynamic building model and HVAC control
- **Scenarios 1 and 3**: building loads
- **Scenarios 2 and 4:** include virtual loads of a REC

The economic benefits strongly depend on the availability of flexible demand, with HVAC systems representing the most effective source of flexibility.

Scenarios	Battery	HVAC	Loads	PV production	Consumption	Net cost
0	Uncontrolled	Uncontrolled	Building	-	-	-
1	Controlled	Uncontrolled	Building	-8%	-12%	-36%
2	Controlled	Uncontrolled	Building+REC	+39%	+3%	-0,3%
3	Controlled	Controlled	Building	-63%	-20%	-59%
4	Controlled	Controlled	Building+REC	+48%	-1,5%	-21%

Changes relative to scenario 0. Net cost includes energy cost and incentives.

RAISE
Finanziato dall'Unione europea NextGenerationEU

ITC Consiglio Nazionale delle Ricerche Istituto per le Tecnologie della Costruzione

Performance of the BEMS in different scenarios

RISEnergy project

- International cluster of research infrastructures open to universities, research organisations and companies for the development and validation of innovative energy technologies.
- Validation of a private company's BEMS based on Model Predictive Control (MPC).
- ZEB-LAB provides a real-scale testing environment for building envelope, HVAC systems and energy management solutions under real operating conditions.

1 Commissioning
Setting of the plant set points (thermal and electrical generation/storage)

2 Model validation
Predictive model, building thermal model and battery model

3 Energy optimisation
Coordinated control of battery, grid and PV with a building thermal model

This Project has received funding from the European Union's Horizon Europe Research and Innovation Programme under Grant Agreement no. 101131793

Advanced control for industrial heat pumps working with natural refrigerants - Application

CO_2 heat pump replacing the electric boiler in a professional hood-type dishwasher

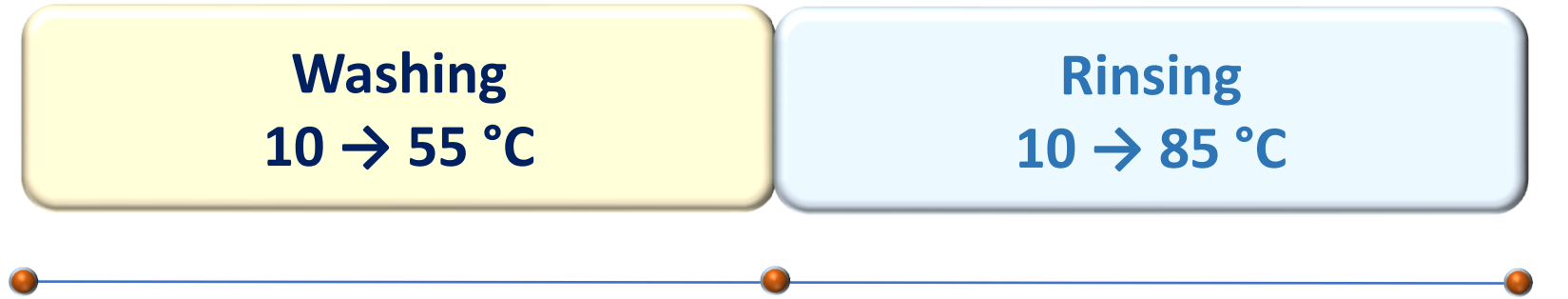



10 kW

Reference electric boiler

2 L

Supply water per complete cycle

20 °C

Indoor ambient (initial condition)

iNEST Interconnected Nord-Est Innovation Ecosystem

ITC Consiglio Nazionale delle Ricerche Istituto per le Tecnologie della Costruzione

Challenges in control design

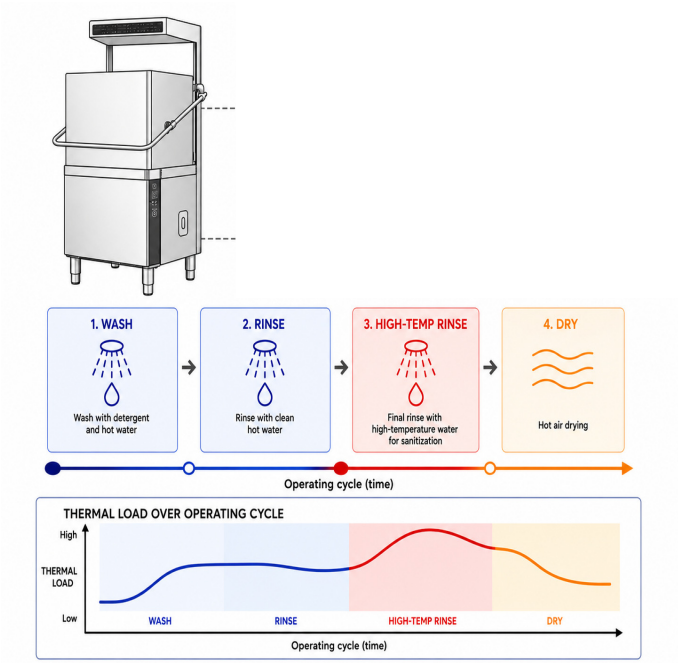

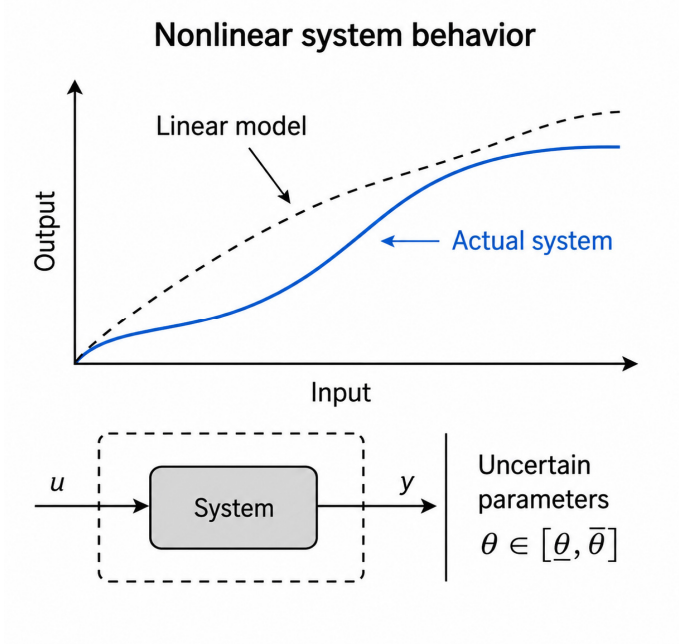

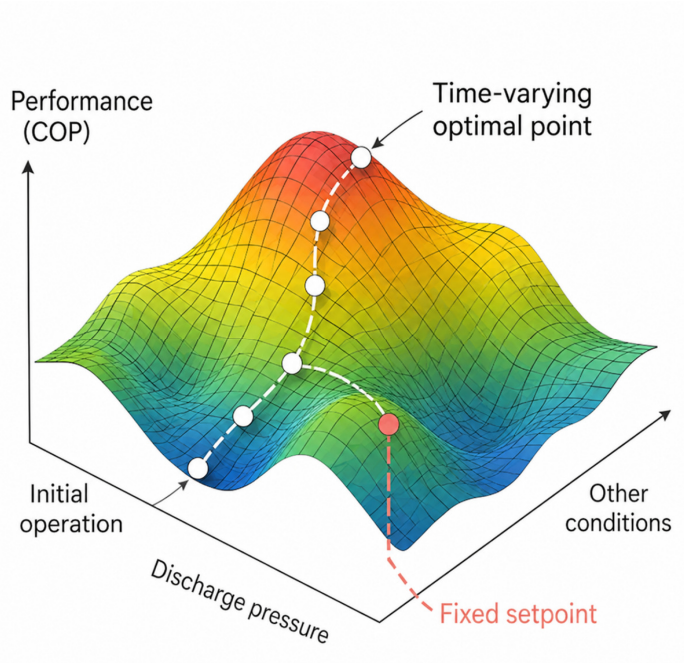

OPERATING CONDITIONS

- Changing operating conditions
- Variable thermal loads

MODELLING

- Nonlinear system behavior
- Uncertain parameters

CONTROL CHALLENGE

- Optimal COP changes with operating conditions and strongly depends on discharge pressure

MODEL-FREE REAL-TIME OPTIMIZER

- Estimates the COP gradient
- Moves the pressure to the optimum
- Re-converges after each change

iNEST Interconnected Nord-Est Innovation Ecosystem

ITC Consiglio Nazionale delle Ricerche Istituto per le Tecnologie della Costruzione

“Extremum Seeking Control” Model-Free

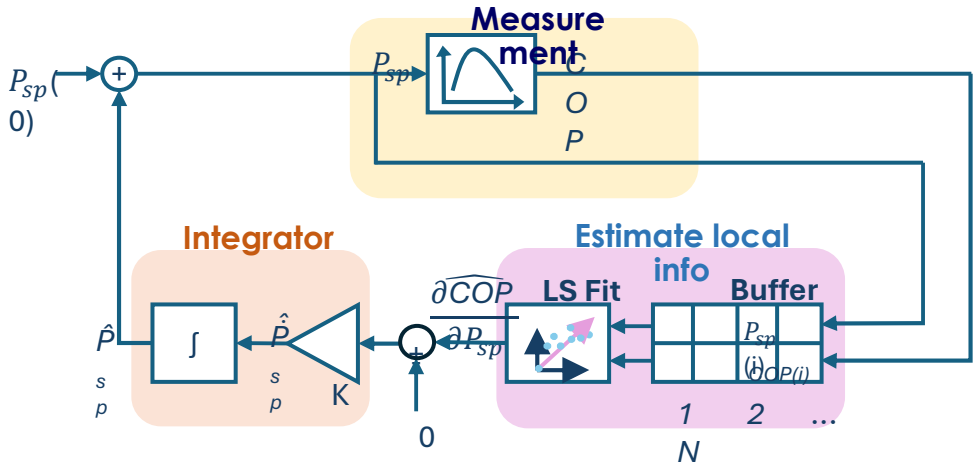

MODEL-FREE REAL-TIME OPTIMIZER

- Estimates the COP gradient
- Moves the pressure to the optimum
- Re-converges after each change

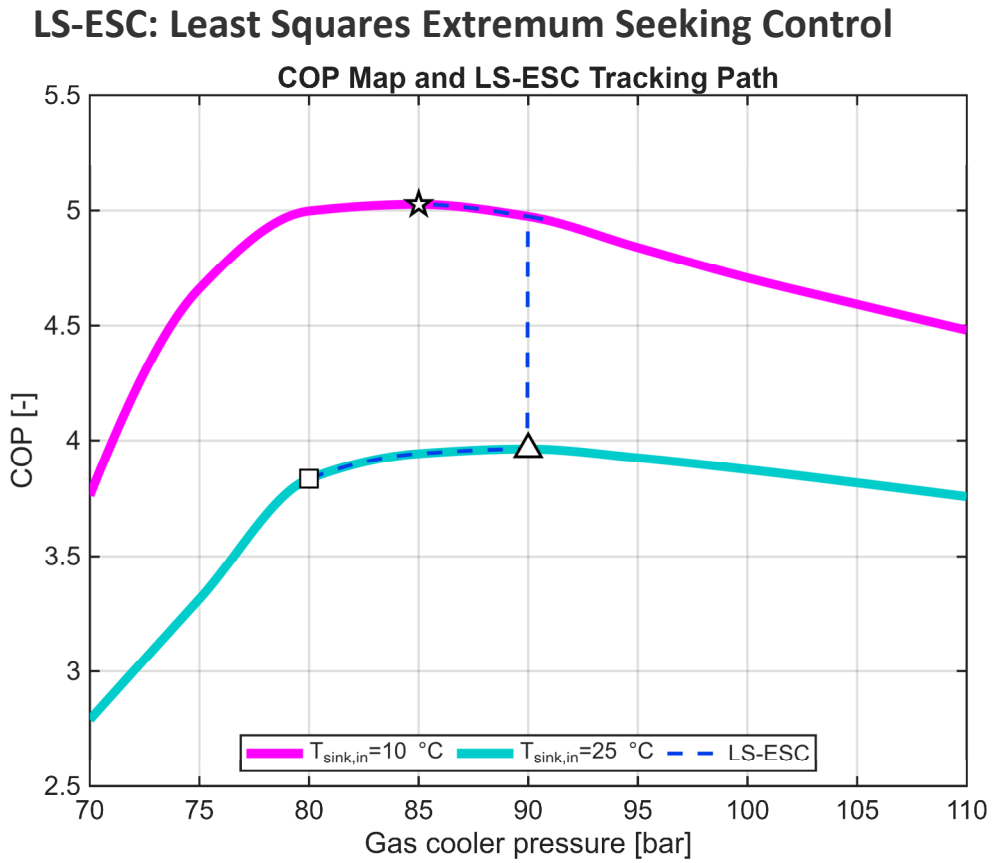

iNEST Interconnected Nord-Est Innovation Ecosystem

ITC Consiglio Nazionale delle Ricerche Istituto per le Tecnologie della Costruzione

LS-ESC Results

- LS-ESC enables real-time COP optimization of CO_2 heat pumps in dishwasher applications
- Provides relevant energy savings compared to electric heating

78%
less electricity
Washing · COP 4.5

72%
less electricity
Rinsing · COP 3.6

iNEST Interconnected Nord-Est Innovation Ecosystem

Lubna Hajaltoom, Francesco Fabris, Silvia Minetto, Sergio Marinetti, Mirco Rampazzo, Antonio Rossetti, "Real-Time Optimization of CO_2 Heat Pumps for Industrial Dishwasher Applications," 15th IEA Heat Pump Conference, Vienna, Austria, 26–29 May 2026

HEAT TRANSFER IMPROVEMENT BY THE USE OF NANOFLUIDS

Thermal Vectors

AERODISP W440 based on WATER and DILUTED to 3% wt Al_2O_3 nanoparticles

- limited viscosity increase
- measurable thermal conductivity enhancement
- limited enhancement of heat transfer coefficients

NOT clearly interesting as THERMAL VECTOR

Brand name original nanofluid	Composition	NPs
Aerodisp W440	**$H_2O+Al_2O_3$**	**3 wt%**
	$H_2O+Al_2O_3$	5 wt%

Lubricants

D-Tribo oil additives (nano-diamond) ADDED to POE oil in CO_2 HP

- First tribometer analyses showed promising results under high surface roughness conditions
- Tests on HP revealed different performances relating to the operating conditions (gas cooler constant @20/70°C), temperature @evaporator

✓ 0/-5°C ⇒ higher COP for POE
✓ 5/0°C ⇒ similar COP
✓ 10/5°C ⇒ higher COP for nano-oil (best @0.2%)
✓ 15/10°C ⇒ higher COP for nano-oil (best @0.2%)

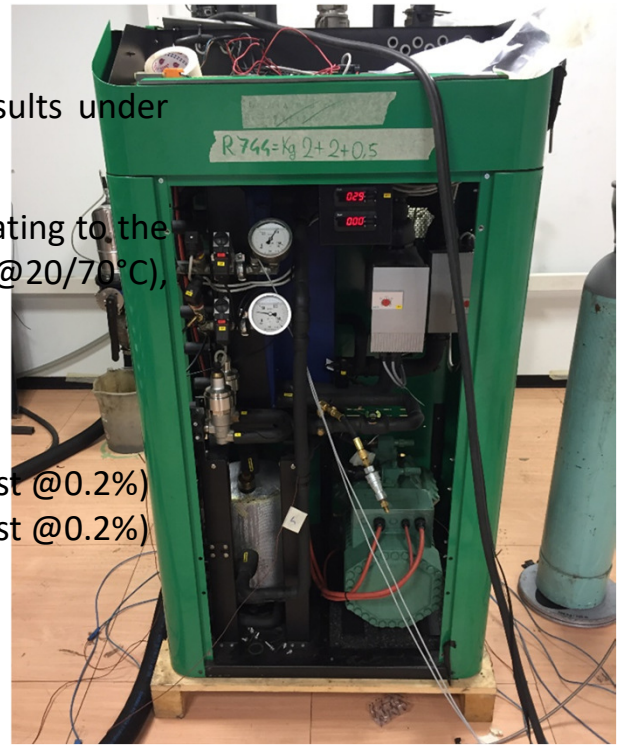

Cheap GSHPs
Co-funded by the European Union

ITC Consiglio Nazionale delle Ricerche Istituto per le Tecnologie della Costruzione

Low-GWP Refrigerants for Ground Source Heat Pumps

INNOVATIVE REFRIGERANT FLUIDS for low environmental impact GSHPs and application in compressors and a heat pump prototype

- Identification of low-GWP (<150) pure fluids and blends for application in ground source heat pumps
- 16 low GWP refrigerants have been identified in the literature as potential substitutes for R134a or R410A to be applied in GSHPs

Fluid	GWP	ASHRAE Safety class	Composition	Tcrit	Pcrit	Tglide
R134a	1430	A1	R134a (100)	101.06	40.59	0
R410A	2088	A1	R32/R125 (50/50)	71.34	49.01	0.12
PROPANE	1	A3	Propane (100)	96.74	42.51	0
ISOBUTANE	1	A3	Isobutane (100)	134.66	36.29	0
R1234yf	4	A2L	R1234yf (100)	94.7	33.82	0
R1234ze(E)	7	A2L	R1234yf (100)	109.36	36.35	0
R444A	91	A2L	R152a/R32/R1234ze(E) (5/12/83)	106.36	44.78	9.5
R445A	135	A2L	R134a/R1234ze(E)/CO2 (9/85/6)	106.04	45.444	22
R451A	149	A2L	R134a/R1234yf (10.2/89.8)	94.36	34.43	0.05
R454C	148	A2L	R32/R1234yf (21.5/78.5)	85.67	43.19	7.45
R455A	148	A2L	R32/R1234yf/CO2 (21.5/75.5/3)	85.61	46.54	11.11
R457A	139	A2L	R32/R1234yf/R152a (18/70/12)	90.05	43.08	6.67
R459B	145	A2L	R32/R1234yf/R1234ze(E) (21/69/10)	87.49	43.61	7.69
R516A	142	A2L	R134a/R1234yf/R152a (8.5/77.5/14)	96.64	36.15	0.01
ARM-42a	64	A2L	R152a/R32/R1234yf (11/7/82)	93.7	39.04	4.9
ND2	75	A2L	R134a/R1234yf (5/95)	94.51	34.12	0.04
ND3	149	A2L	R134a/R1234yf (10/90)	94.37	34.42	0.4
ND4	151	A2L	R32/R1234yf/CO2 (22/72/6)	84.95	49.8	14.19

SELECTED FLUID → R600a (ISOBUTANE)

PROS

- very low GWP (~1) > international pressure for natural fluids
- very good COP > low indirect environmental impact
- wide availability and low cost

CONS

- very low volumetric heating capacity > much less important than COP
- highly flammable (A3) > but all low GWP alternatives are flammables (at least A2L). The prescriptions for flammable refrigerants are given by regulation EN 60335-2-40. They are similar but more restrictive for A3 refrigerants

SCREENING RESULTS

Fluid		1° Screening (COP/EER) [%]	2° Screening (VHE/VCE) [%]	3° Screening (Safety)	4° Screening (Availability)
HCs	**ISOBUTANE**	0.0/0.0	-62.4/-59.9	A3	Widespread
	PROPANE	-2.36/-3.56	0.0/0.0	A3	Widespread
HFOs	**R1234yf**	-1.50/-4.72	-29.1/-27.9	A2L	Widespread (automotive)
	R1234ze(E)	-1.57/-2.17	-49.7/-43.9	A2L	Widespread
Mixtures	**R451A** (R134a/R1234yf 10.2/89.8)	-3.86/-4.63	-29.3/-26.2	A2L	Experimental
	R516A (R134a/R1234yf/R152a 8.5/77.5/14)	-2.52/-3.39	-27.8/-24.8	A2L	Limited
	ND2 (R134a/R1234yf 5/95)	-3.96/-4.39	-30.1/-26.8	A2L	Experimental
	ND3 (R134a/R1234ze(E) 10/90)	-1.67/-1.94	-44.8/-43.9	A2L	Experimental

Different GSHPs configurations

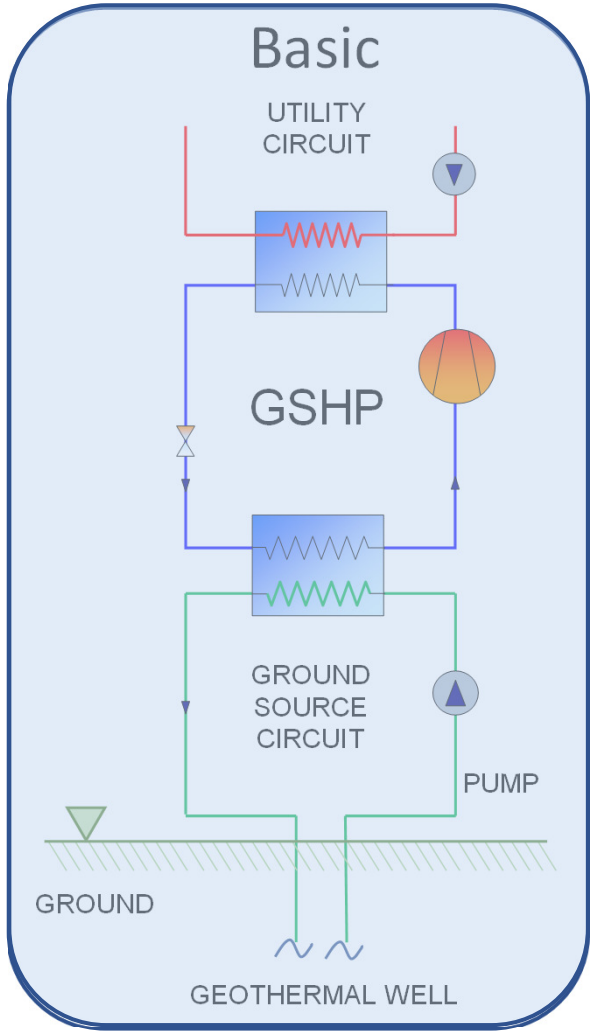

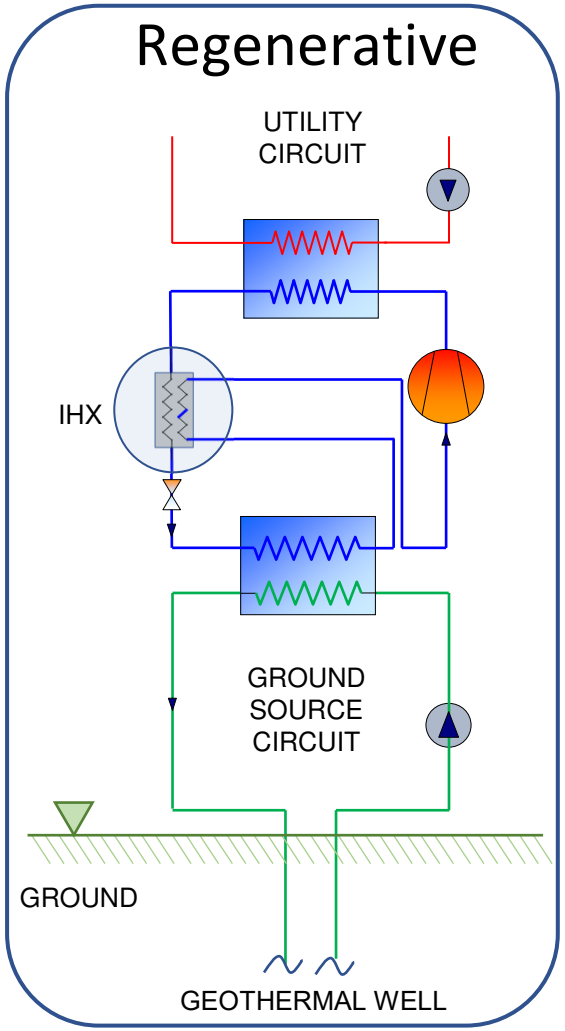

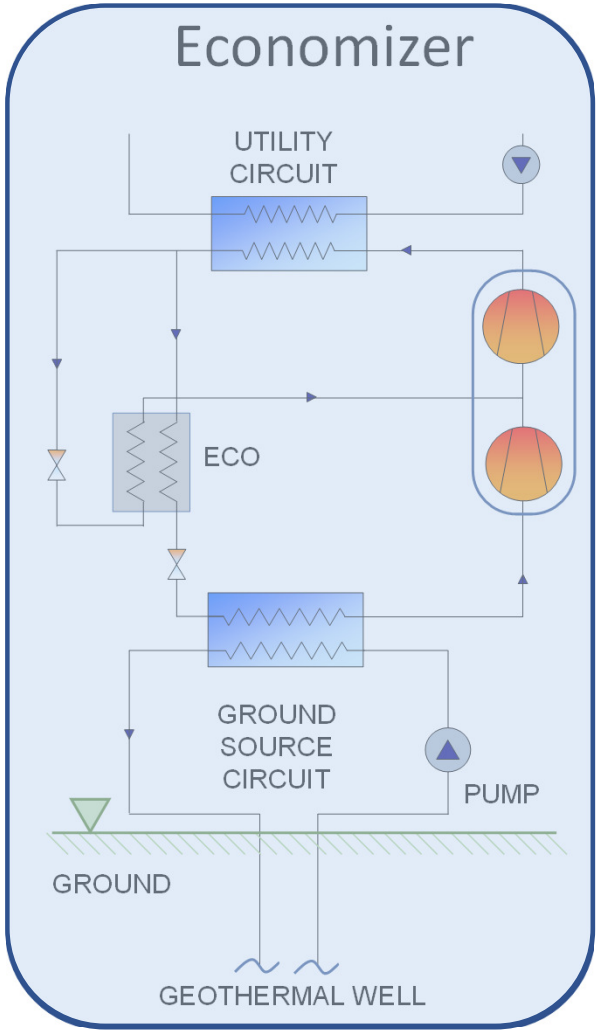

APPLICATION IN COMPRESSORS AND A HEAT PUMP PROTOTYPE

Innovative refrigerant fluids for low environmental impact GSHPs

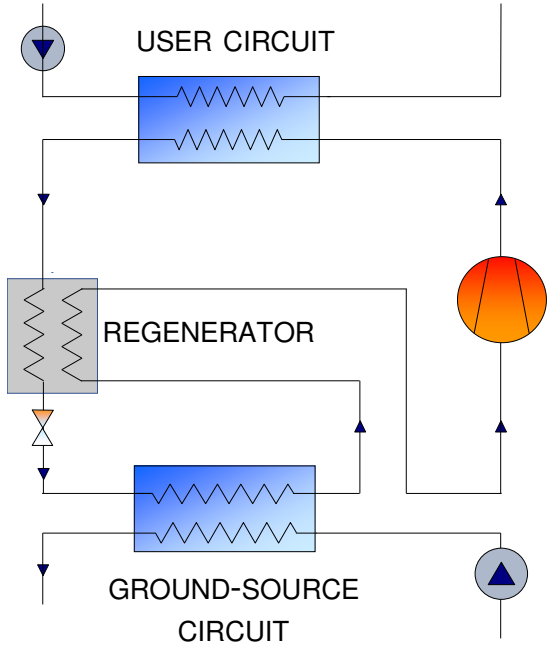

conceptual scheme of the R600a GSHP (R454B)

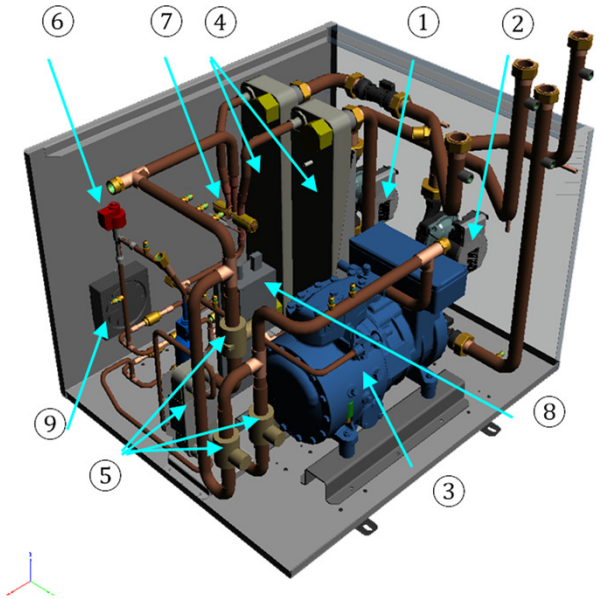

3D configuration of the R600a heat pump

Component	Characteristic	Unit	Value
Compressor Frascold D2-15.1AXH	Number of pistons	Nr	2
	Nominal motor power	kW	1,5
	Displacement @ (1450 rpm - 50 Hz)	m³/h	15,4
	Lubricant	-	PAG68
	Oil charge	L	1,1
	Maximum operating pressure HP	bar	30
	Maximum static pressure LP	bar	20,5
	Capacity step	%	100-50
Condenser-Evaporator SWEP F85 x22/1P-SC-M	Maximum number of plates	Nr	160
	Max flow	m³/h	17
	Channel volume	dm³	0.094/0.094
	Material	-	316/316L stainless steel plates, copper brazing
Regenerator SWEP B5TH x12/1P-SC-M	Maximum number of plates		60
	Max flow	m³/h	4
	Channel volume	dm³	0.024/0.024
	Material	-	316/316L stainless steel plates, copper brazing
Electronic expansion valve Carel E2 V18FSFC0	Compatibility with refrigerant		R600a
	Maximum Operating Pressure (MOP) – CE/UL	bar	60/45
	Maximum Operating DP (MOPD) – CE/UL	bar	35
	Refrigerant temperature	°C	-40/70
	Room temperature	°C	-30/70
	Minimum step	Nr	50
	Maximum step	Nr	480
	Step angle	degree	15
Circulator Wilo Para R 25-130/8-87/IPWM1-12	Fluid temperature	°C	- 20/95
	Ambient temperature	°C	0/70
	Hydraulic performance	m	6/7/8/9

GEO4CIVHIC
Co-funded by the European Union

ITC Consiglio Nazionale delle Ricerche Istituto per le Tecnologie della Costruzione

The role of heat pumps in the ECHO project

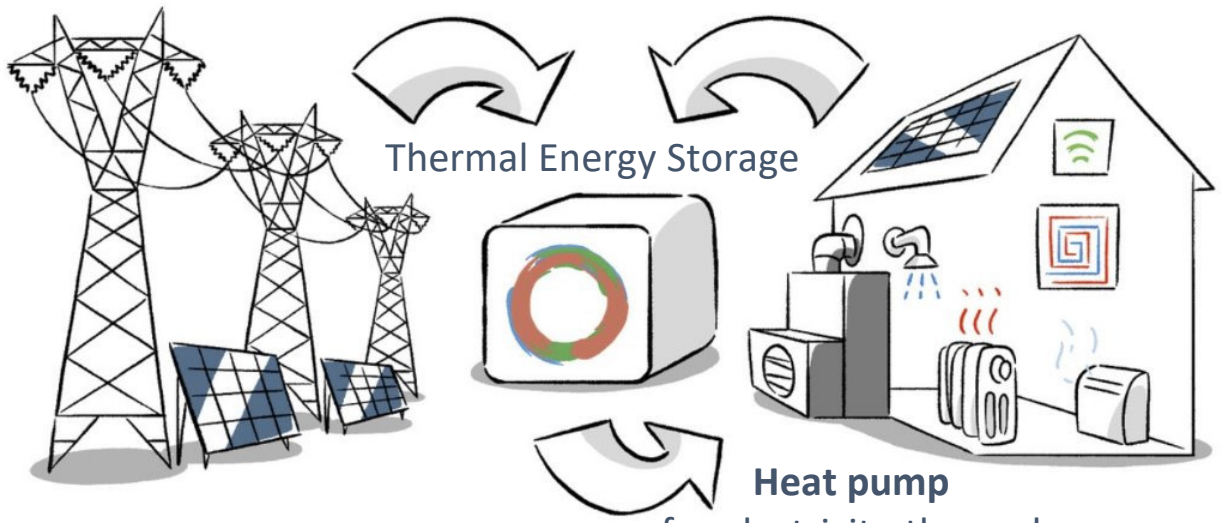

Heat pump
for electricity-thermal sector coupling

Project objective

Development and demonstration of an innovative TES with thermochemical and phase change materials (TCM and PCM) for **residential** applications

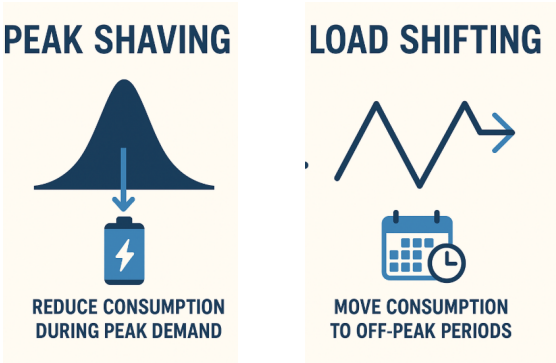

Excess electric energy is converted to thermal energy by the heat pump and stored in the TES system

ECHO

Funded by the European Union

"Funded by the European Union. Views and opinions expressed are however those of the author(s) only and do not necessarily reflect those of the European Union or the European Climate Infrastructure and Environment Executive Agency (CINEA). Neither the European Union nor the granting authority can be held responsible for them."

ITC Consiglio Nazionale delle Ricerche Istituto per le Tecnologie della Costruzione

Two different heat pumps in the ECHO project

DEMO SITE 1
Padova (Italy)
Consiglio Nazionale delle Ricerche

DEMO SITE 2
Belgrade (Serbia)
institute MIHAILO PUPIN

DEMO SITE 3
Putte (Belgium)
GREENCO
green energy solution consultant

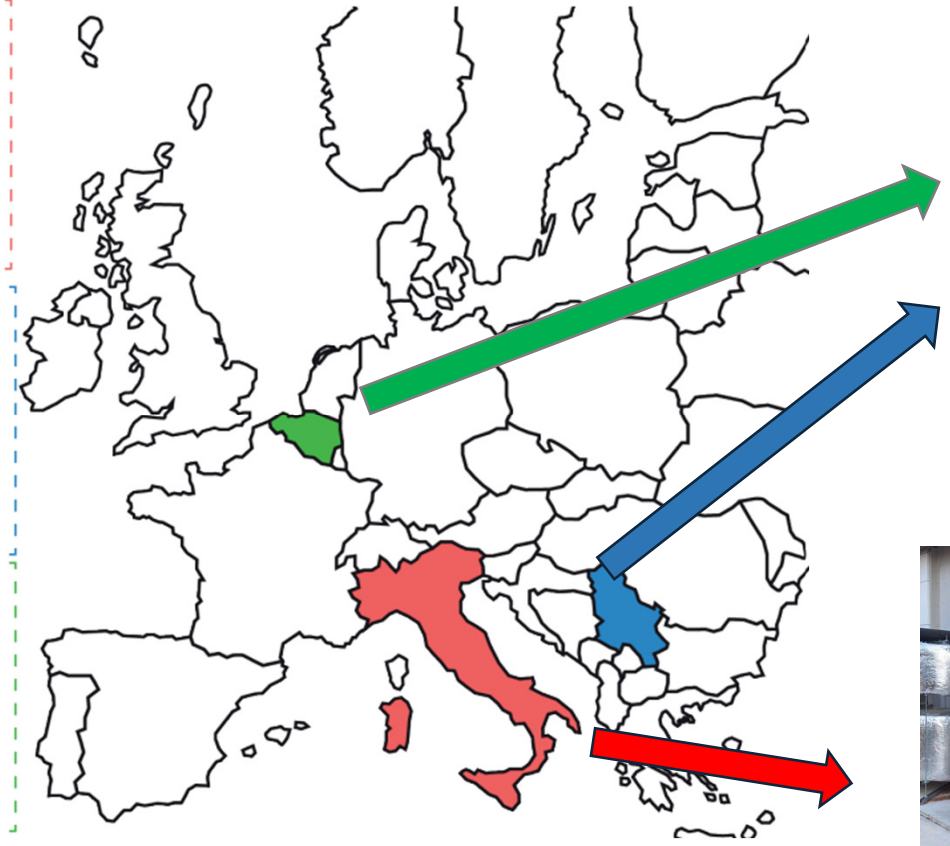

Refrigerant: **R515B**

HiRef ENX010



Charge mode
Heating capacity: 10.2 kW (6.84 kW with subcooler)
Cooling capacity: 5.6 kW
COP: 2.24

Cold storage mode
Cooling power: 4.2 kW
Condensing power: 6.5 kW
EER: 1.26

Refrigerant:
R290 (propane)

HiRef HXE020



Charge mode
Heating capacity: 20.9 kW
Cooling capacity: 11.3 kW
TER: 3.1

Cold storage mode
Cooling power: 13.6 kW
EER: 2.03

3 in 1 unit
- Space heating or Domestic Hot Water production when TES is not charged
- Charge of the cold storage or space cooling
- TCM charge

ECHO

Funded by the European Union

"Funded by the European Union. Views and opinions expressed are however those of the author(s) only and do not necessarily reflect those of the European Union or the European Climate Infrastructure and Environment Executive Agency (CINEA). Neither the European Union nor the granting authority can be held responsible for them."

CONCLUSIONS

- Different heat pump technologies can address complementary needs, from low-grade waste heat recovery to high-temperature industrial applications and building heating and cooling.
- System integration is as important as component efficiency: renewable sources, thermal storage and advanced energy management can substantially increase the decarbonisation potential of heat pumps.
- Control strategies, refrigerant selection and heat-transfer solutions are key research areas for improving performance under variable operating conditions while reducing environmental impact.
- CNR activities span the entire innovation chain, from materials and working fluids to modelling, laboratory testing, prototype development, full-scale experimental facilities and demonstration projects in real operating conditions.

Thank you for your attention!

CNR ITAE
andrea.frazzica@cnr.it
valeria.palomba@cnr.it

CNR ITC
ludovico.danza@cnr.it
lorenzo.belussi@cnr.it
silvia.minetto@cnr.it
sergio.bobbo@cnr.it
davide.menegazzo@cnr.it
laura.fedele@cnr.it

GSHPs Schemes with Expander

Regenerative

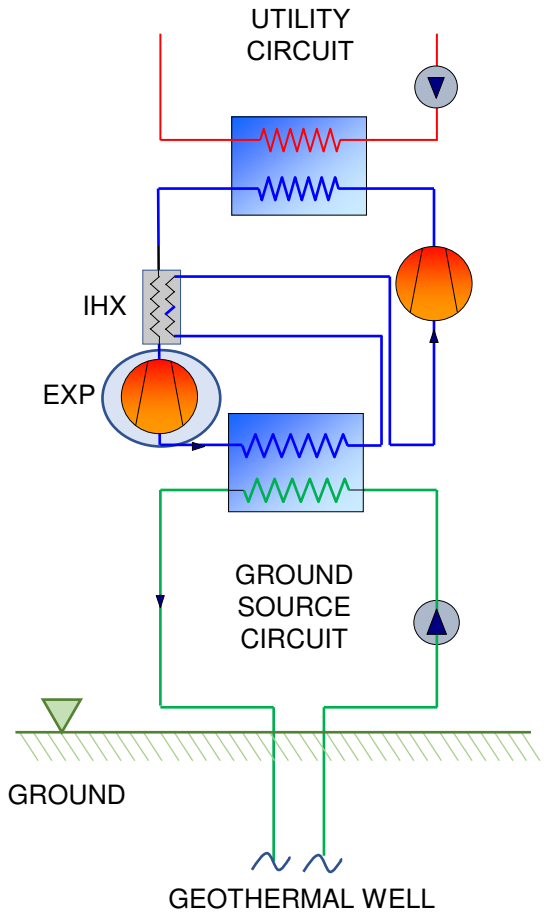

- Expander in place of throttling valve to recover expansion work
- Expansion isentropic efficiency set to 0.4 and constant
- Improvement from 3% to 10% depending on the fluid
- Further research nedeed